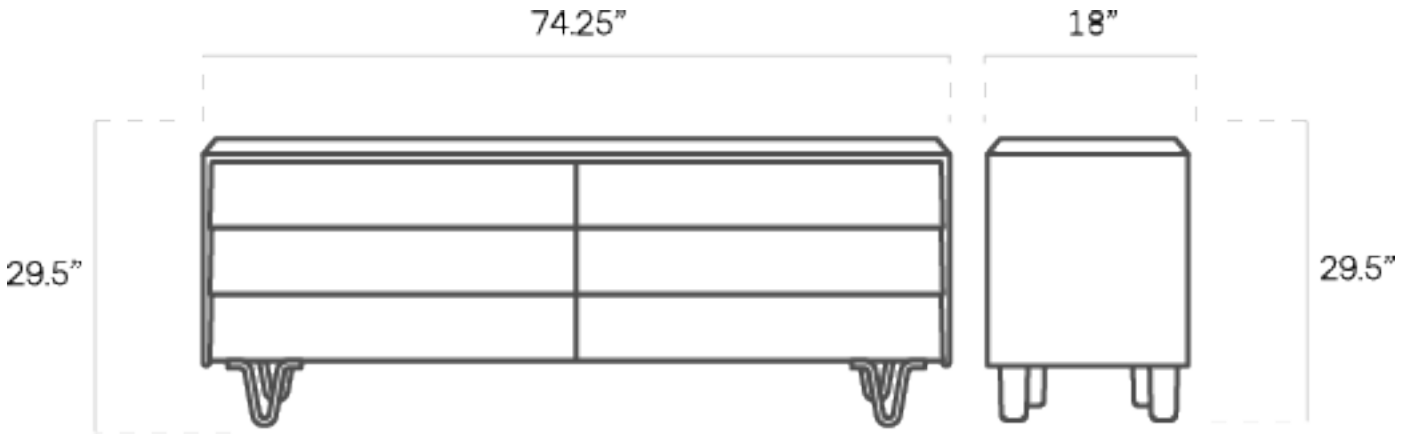
74.25”
18”
29.5”
29.5”

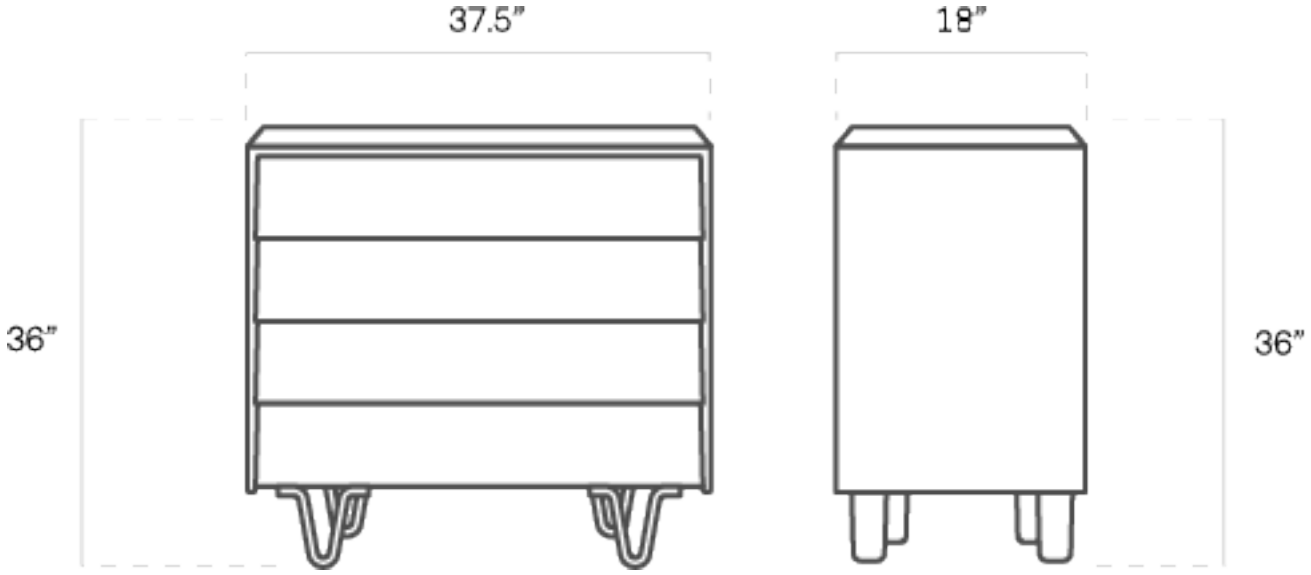
37.5"
18"
36"
36"

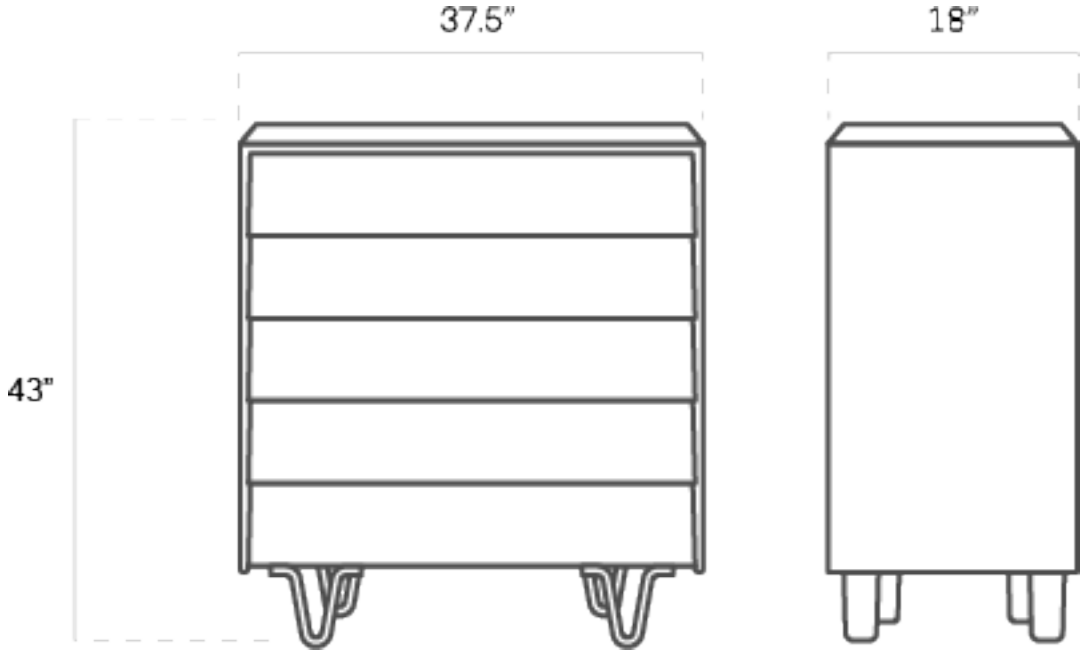
37.5"
18"
43"